ENGINE, DIPSTICK AND OIL FILTER - Z26S4D92AN/AH/BN/BH (C750275)

2026 RZR - RZR PRO S4 ULTIMATE (R01) - Z26S4D92AN/AH/BN/BH

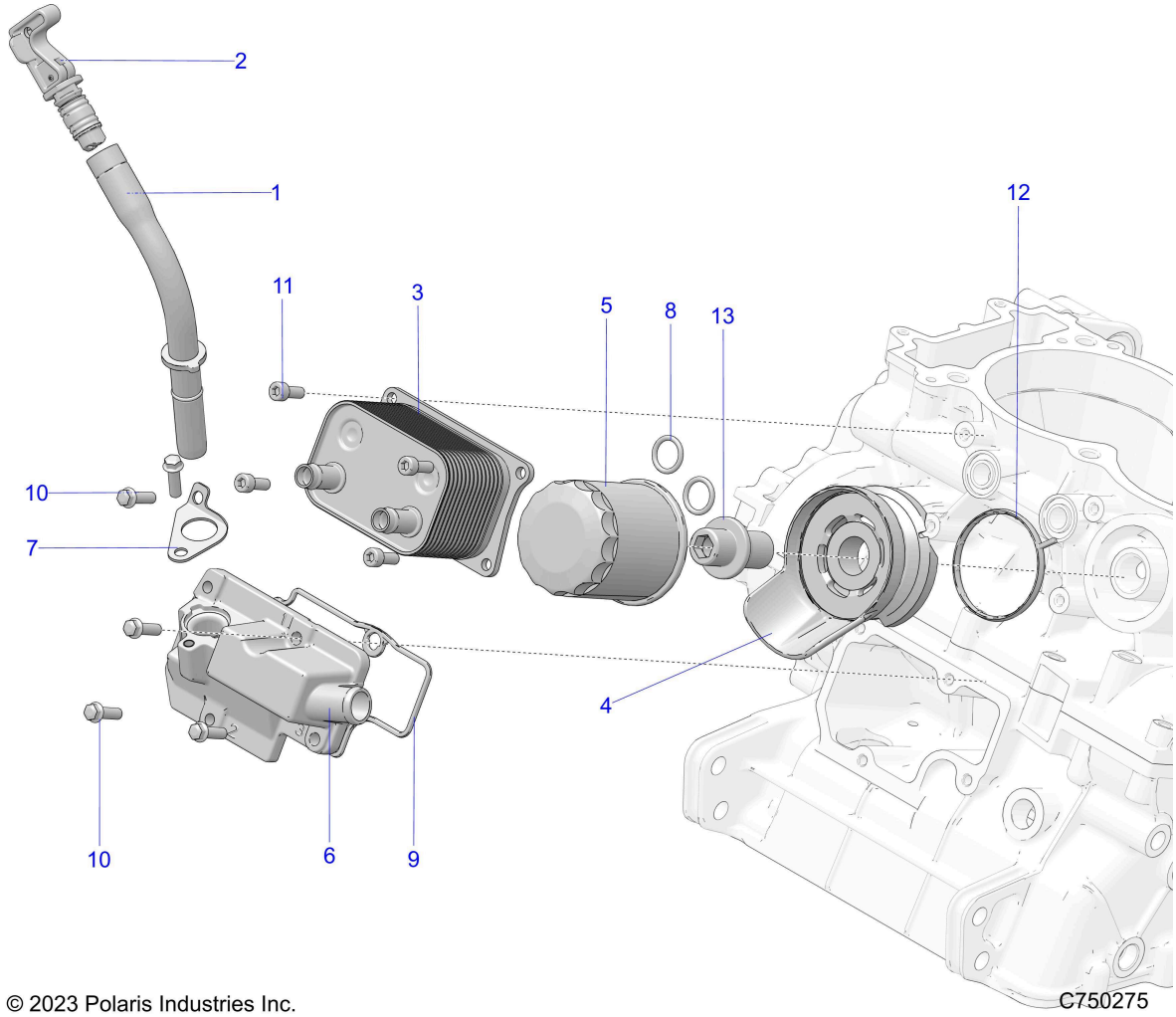

© 2023 Polaris Industries Inc.

Reference #	*Part#*	*Description*	*Quantity*
1	3022896	ASM., OIL FILL TUBE	1
2	3023488	ASM-DIPSTICK	1
3	1240820	COOLER, OIL TO WATER, 7	1
4	5142150	ADAPTER-OIL FILTER,MACH	1
5	2520799	FILTER-OIL,10 MICRON	1
5	2522498	FILTER-HD,OIL (3.355) [HD OPTION]	1
6	5143720	COVER-BREATHER,MACH	1
7	5255453	BRACKET, TUBE, OIL FILL, LOWER	1
8	5413837	O-RING,.612X.818X.103	2
9	5813759	SEAL-COVER,BREATHER	1
10	7518576	SCREW-HXFL-M6X1.0X20 8.8 ZY3	5
11	7519303	SCREW-SH-M6X1.0X16 8.8 ZPY D204	4
12	3610318	SEAL-FILTER ADAPTER	1
13	7520924	BOLT-SHFL-M20X1.5X23.5 8.8 ZPC	1

Copyright 1996-2026 Polaris Industries U.S.A All rights reserved.